Centre Number	Candidate Number	Name

UNIVERSITY OF CAMBRIDGE INTERNATIONAL EXAMINATIONS
General Certificate of Education
Advanced Subsidiary Level and Advanced Level

PHYSICS **9702/03**

Paper 3 Practical Test

October/November 2006

1 hour 15 minutes

Candidates answer on the Question Paper.
Additional Materials: As listed in the Confidential Instructions.

READ THESE INSTRUCTIONS FIRST

Write your Centre number, candidate number and name on all the work you hand in.
Write in dark blue or black pen.
You may use a soft pencil for any diagrams, graphs or rough working.
Do not use staples, paper clips, highlighters, glue or correction fluid.

Answer the **one** question.

You are expected to record all your observations as soon as they are made, and to plan the presentation of the records so that it is not necessary to make a fair copy of them. The working of the answers is to be handed in.
Marks are mainly given for a clear record of the observations actually made, for their suitability and accuracy, and for the use made of them.
Additional answer paper and graph paper should be submitted only if it becomes necessary to do so.
You are reminded of the need for good English and clear presentation in your answers.

At the end of the examination, fasten all your work securely together.

For Examiner's Use

This document consists of **7** printed pages and **1** blank page.

© UCLES 2006

BLANK PAGE

You may not need to use all of the materials provided.

1 In this experiment you will investigate how the length of a vibrating wire is affected by the tension in the wire.

(a) A mass of 150 g has been suspended using a copper wire as shown in Fig. 1.1.

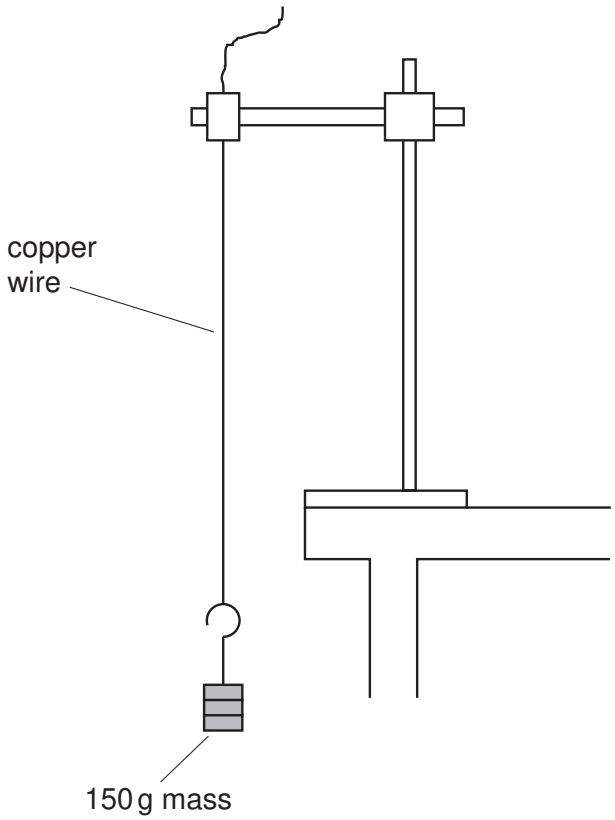

Fig. 1.1

© UCLES 2006

[Turn over

(i) Clamp the U-shaped magnet so that the wire hangs mid-way between the pole pieces and is positioned about 25 cm below the point of suspension as shown in Fig. 1.2.

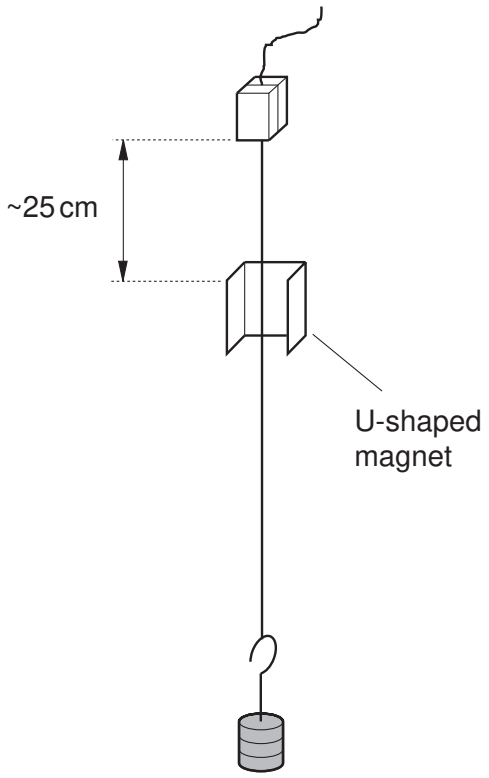

Fig. 1.2

(ii) Construct the circuit shown in Fig. 1.3. A connection to the top of suspended wire should be made using a crocodile clip. Connection to the lower end of the wire may be made by placing the metal end of a plug against the wire.

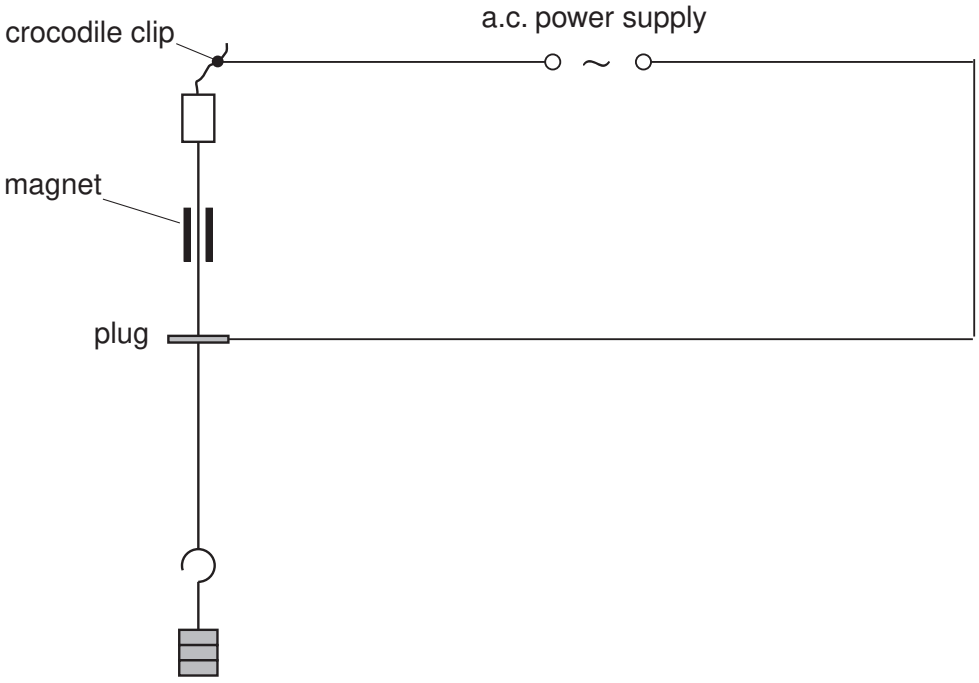

Fig. 1.3

© UCLES 2006

(b) (i) Adjust the position of the plug by gently sliding it up or down the wire until the wire performs large amplitude oscillations as shown in Fig. 1.4.

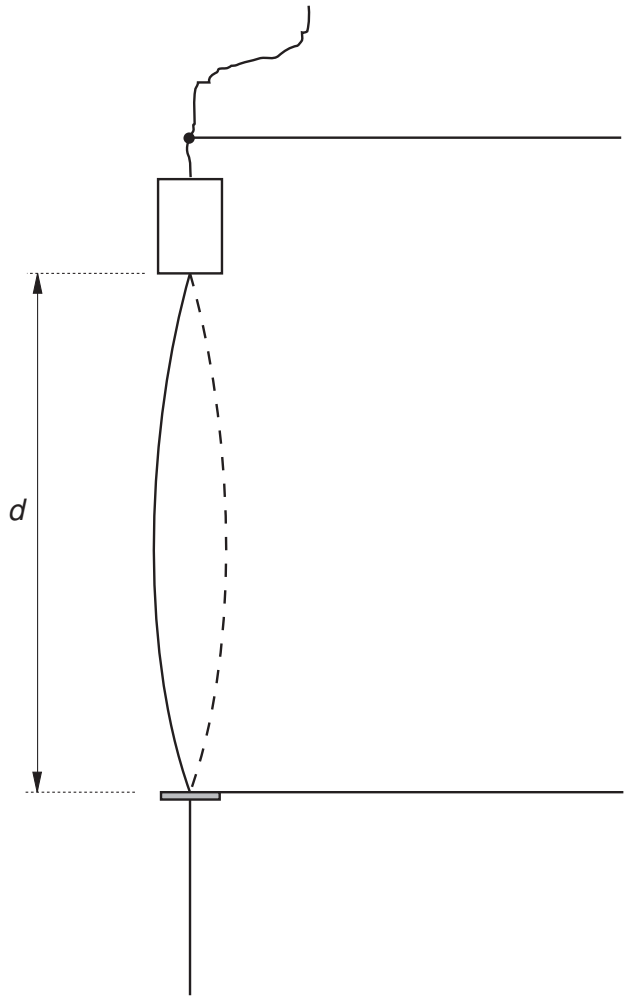

Fig. 1.4

(ii) Measure and record the length d and calculate the tension T in the wire.

The gravitational field strength $g = 9.8\,\text{N kg}^{-1}$.

d = ... m

T = ... N

(c) Determine the percentage uncertainty in this value of d.

percentage uncertainty in d = ...

© UCLES 2006

(d) (i) Change the value of T by altering the mass and repeat **(b)** until you have six sets of values for d and T. Include values of $\sqrt{T}$ in your table of results.

(ii) Justify the number of significant figures that you have given for $\sqrt{T}$.

.....

.....

.....

(e) (i) Plot a graph of d (y-axis) against $\sqrt{T}$ (x-axis) and draw the line of best fit.

(ii) Determine the gradient of the line.

gradient = ...

© UCLES 2006

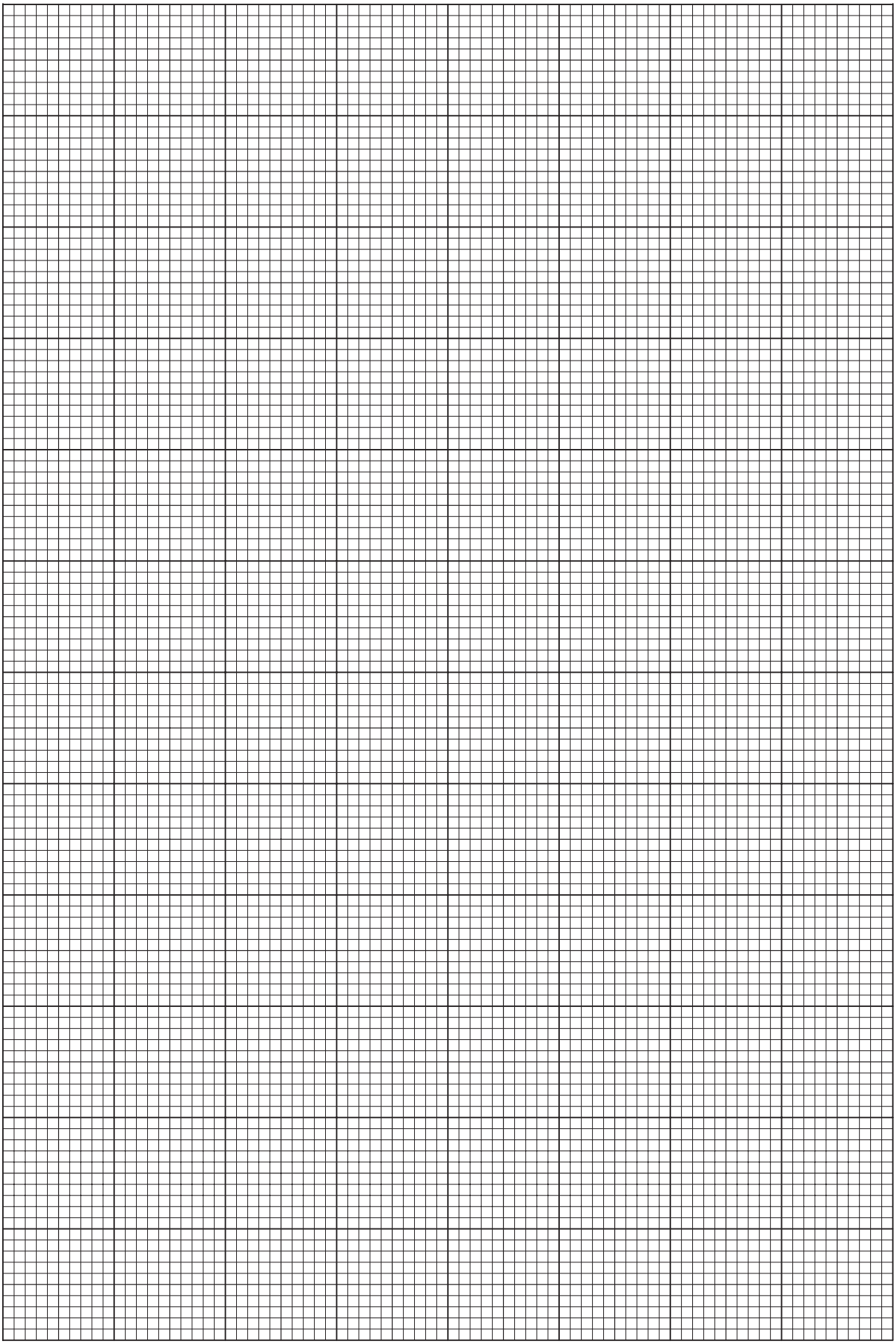

(f) The formula which relates d and T is

$$d = \frac{1}{2f}\sqrt{\frac{T}{m}}$$

where m is the mass per unit length of the wire and f is the frequency of vibration of the wire.

Use your answer from **(e) (ii)** and the value of f (written on a card) to determine a value for m. Include an appropriate unit with your value.

m = ...

(g) State one difficulty that you had when performing the experiment and one improvement that you would make if you had to repeat the experiment.

difficulty

.....

.....

.....

improvement

.....

.....

.....

Permission to reproduce items where third-party owned material protected by copyright is included has been sought and cleared where possible. Every reasonable effort has been made by the publisher (UCLES) to trace copyright holders, but if any items requiring clearance have unwittingly been included, the publisher will be pleased to make amends at the earliest possible opportunity.

University of Cambridge International Examinations is part of the University of Cambridge Local Examinations Syndicate (UCLES), which is itself a department of the University of Cambridge.